Equipot. outlet

Equipotential outlet, Impressivo, 2-gang, anthracite

Type: 2095 UC-81

Product ID: 2CKA002495A0084

GTIN: 4011395065532

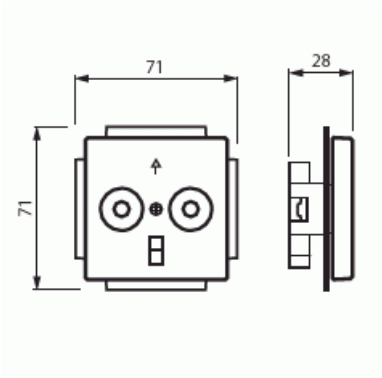

Equipotential socket outlet 2-gang. Screw terminals for 1x6 and 4 x 2,5 conductors. It is suitable for the 85mm cover frames and with the 2519-xx adapter also for the 100mm cover frames. The manufacture material is a durable high quality plastic. The surface is glossy and easy to keep clean. Cleaning with a mild, standard household detergent. Be careful when cleaning with a powerful dissolvent.

Technical specification

Packing

Package:	10/100
Unit:	PCS

ETIM Data

ETIM Version:	ETIM-9.0
ETIM Class:	EC000090
Assembly arrangement:	Basic element with central cover plate
Model:	Socket outlet 2-position
Halogen free:	Yes
Surface protection:	Untreated
Surface finishing:	Glossy

© ABB 2026
Business ID 0763403-0
www.installationmaterials.com

Customer service
puh. +358 10 222 1999
contact.center@fi.abb.com

ABB Exchange
+358 10 22 11

Colour:	Anthracite
RAL-number (similar):	7021
Transparent:	No

© ABB 2026
Business ID 0763403-0
www.installationmaterials.com

Customer service
puh. +358 10 222 1999
contact.center@fi.abb.com

ABB Exchange
+358 10 22 11